REVISIONS				
ZONE	REV	DESCRIPTION	DATE	APPROVED

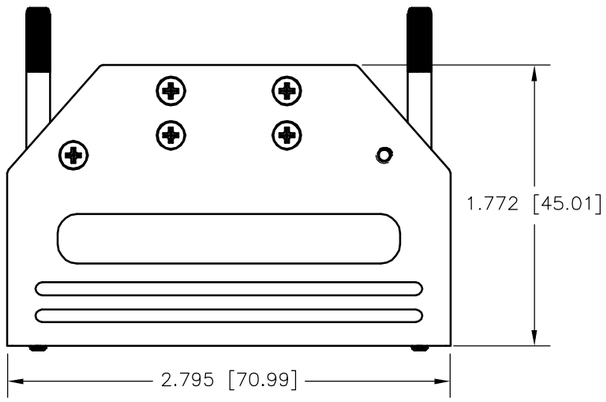

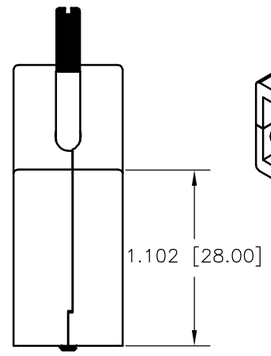

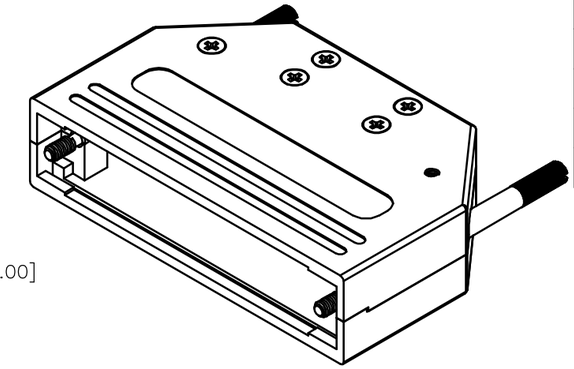

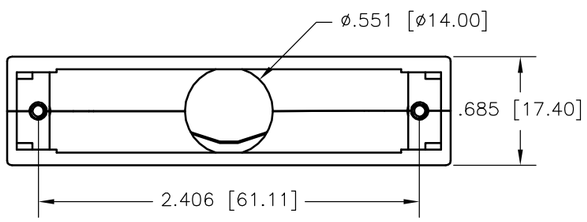

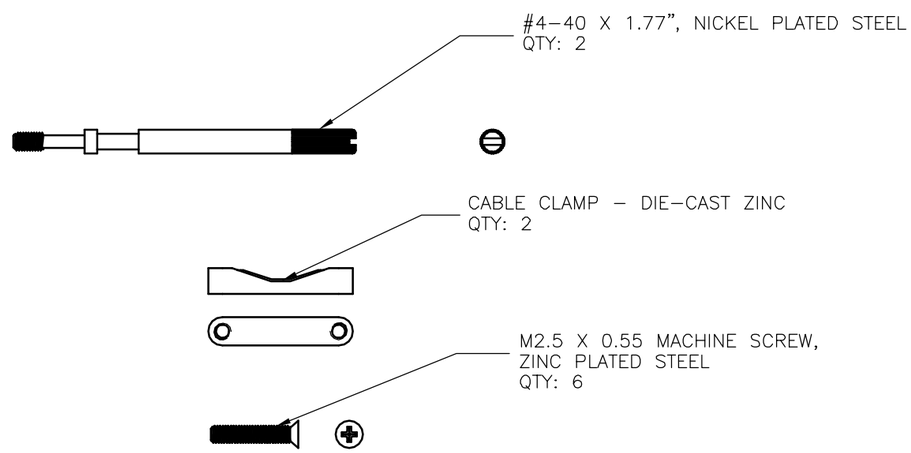

NOTES:

1. COVER MATERIAL: DIE-CAST ZINC
2. COVER FINISH: NICKEL OVER COPPER UNDERPLATE
3. OPERATING TEMPERATURE RANGE: −30° C TO +90° C

THIS IS A CONTROLLED DOCUMENT AND IS SUBJECT TO CHANGE. CONTACT NORTHERN TECHNOLOGIES ENGINEERING FOR THE LATEST REVISION.

UNLESS OTHERWISE SPECIFIED
1. ALL DIMENSIONS ARE IN INCHES [MM]
2. DIMENSIONS ARE TYPICAL

DRAWN Luis C.	29-APR-09
CHECKED JSD	15-MAY-09
ISSUED	15-MAY-09

Northern Technologies

THIS DRAWING IS THE PROPERTY OF NORTHERN TECHNOLOGIES AND SHOULD NOT BE REPRODUCED WITHOUT NORTHERN TECHNOLOGIES WRITTEN PERMISSION.

PART NUMBER MHDETZI50K

DESCRIPTION CM 50 STRAIGHT EXIT DUAL STRAIN RELIEF

SIZE	CODE	DWG NO.	REV
B	200_269	0002-200-269	

SCALE NTS | SHEET 1 OF 1