REV	DESCRIPTION	DATE	APPR
A	ECN0811A	12-DEC-19	

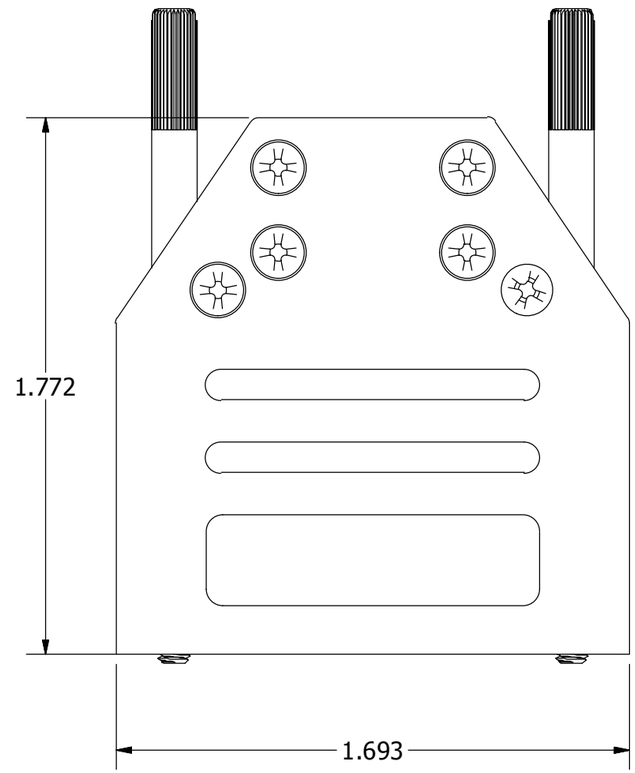

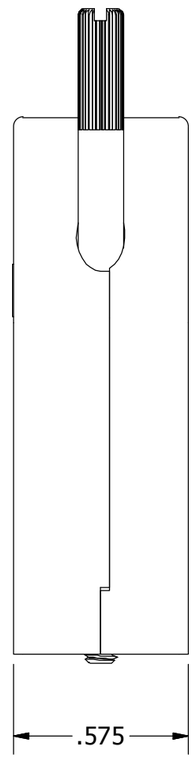

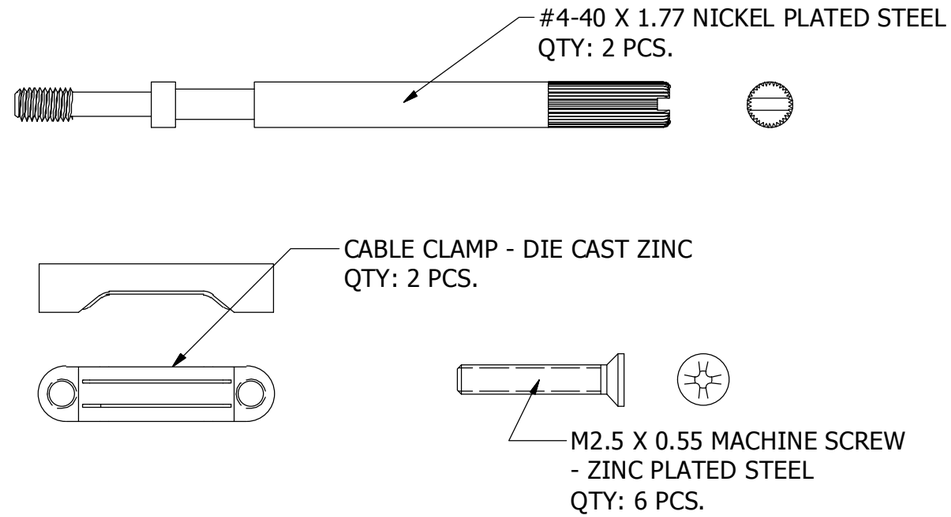

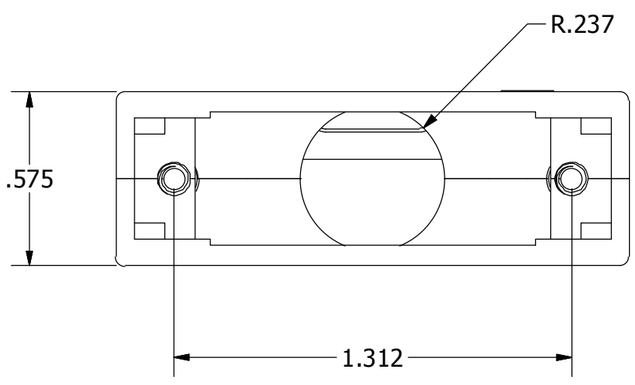

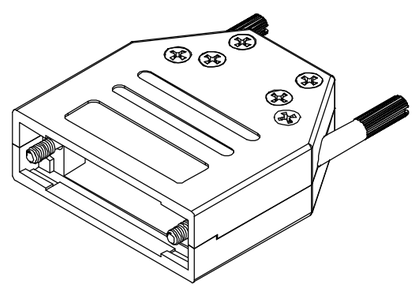

NOTES:
1. Cover Material: Die-Cast Zinc
2. Cover Finish: Nickel over Copper Underplate
3. Operating Temperature: 130° C to +90° C

DRAWN JoSoDo	11-OCT-19	
CHECKED SM	14-OCT-19	
ISSUED	12-DEC-19	

UNLESS OTHERWISE SPECIFIED
1. ALL DIMENSIONS ARE IN INCHES
2. TYPICAL DMENSIONS SHOWN

Northern Technologies

THIS DRAWING IS THE PROPERTY OF NORTHERN TECHNOLOGIES AND SHOULD NOT BE REPRODUCED WITHOUT NORTHERN TECHNOLOGIES WRITTEN PERMISSION.

PART NUMBER MHDETZI15K

DESCRIPTION STRAIGHT EXIT DUAL STRAIN RELIEF COVER

SIZE	CODE	DWG NO.
B	200_266	0002-200-266REVA

SCALE NTS

SHEET 1 OF 1

THIS IS A CONTROLLED DOCUMENT AND IS SUBJECT TO CHANGE. CONTACT NORTHERN TECHNOLOGIES FOR THE LATEST REVISION.